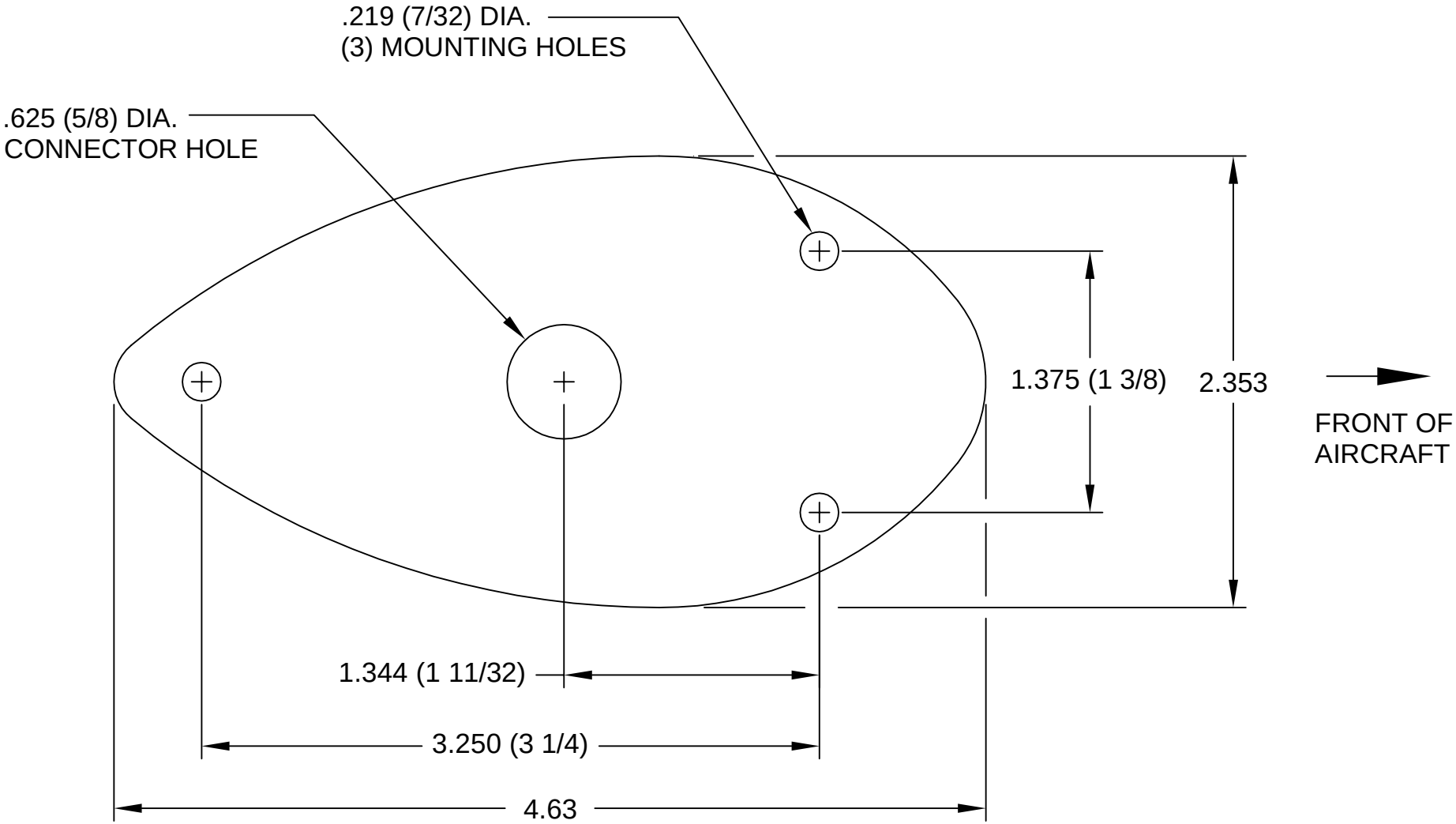
.219 (7/32) DIA.
(3) MOUNTING HOLES
.625 (5/8) DIA.
CONNECTOR HOLE
1.375 (1 3/8)
2.353
FRONT OF
AIRCRAFT
1.344 (1 11/32)
3.250 (3 1/4)
4.63