AV-12L
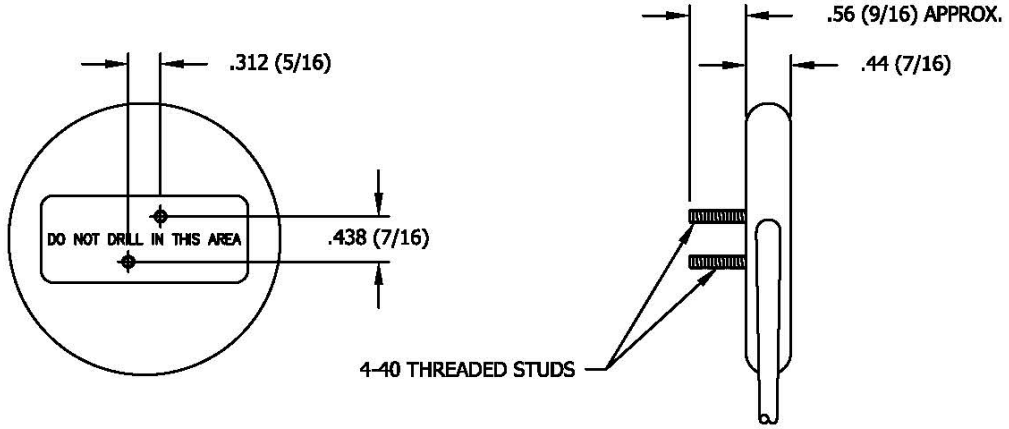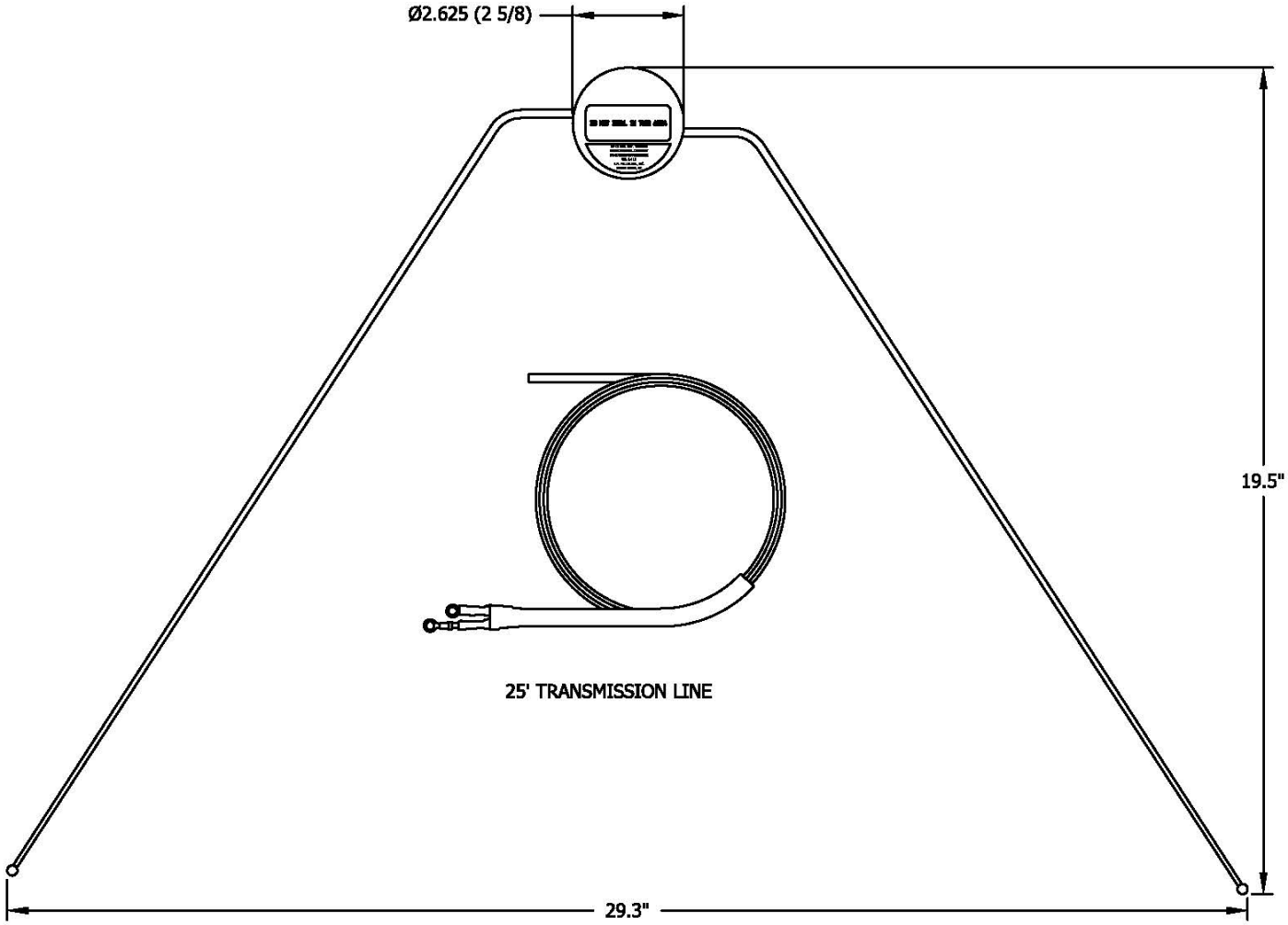
LOUD AND CLEAR