AV-300 & AV-300(-GB)

Airborne ELT Antenna

FAA TSO: C126a

The AV-300 ELT antenna is intended for use with a 406 MHz ELT (Emergency Locator Transmitter) for General Aviation. It is a passive three frequency fiberglass rod whip antenna, designed for low speed aircraft (up to 350 knots). It has met DO-160G, Section 8, Category U requirements for robust vibration and is qualified for installation on helicopters with unknown rotor frequencies.



Product Specifications

Application		Airborne ELT
Frequency		121.5 MHz 243 MHz 406 MHz
Impedance		50 Ohms Nominal
VSWR	*121.5 MHz:*	2.0:1 Maximum
	243 MHz:	2.0:1 Maximum
	406 MHz:	1.5:1 Maximum
Polarization		Vertical
Pattern		Omni-Directional
Connector		BNC Female
RF Power Capacity		10 Watts CW
FAA TSO		C126a

Mechanical Specifications

Height	14.0"	355.6 mm
Weight	9 oz.	0.25 kg
Available Colors	AV-300	Gloss White
	AV-300(-GB)	Gloss Black

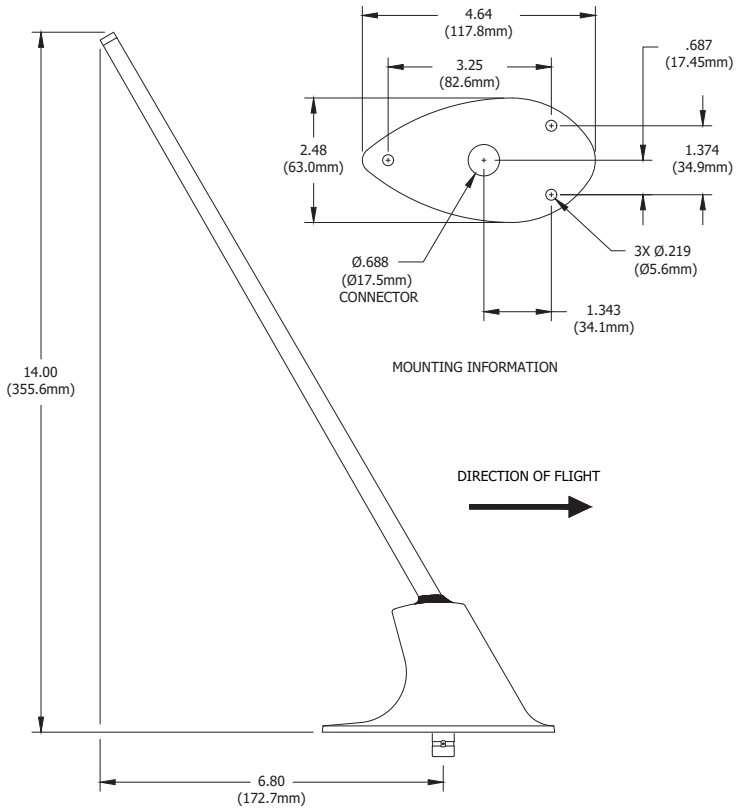

VSWR

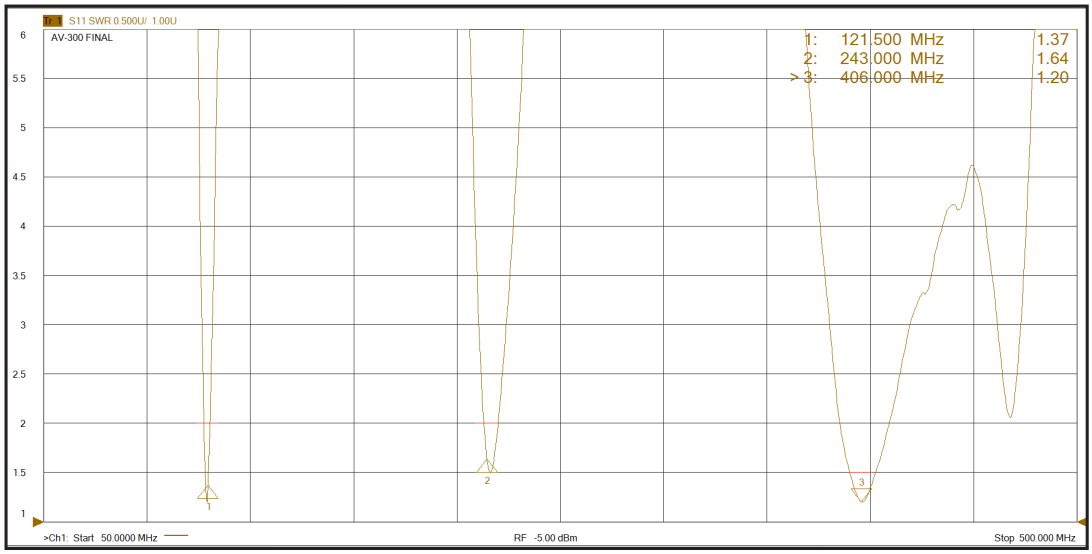
Tr1 S11 SWR 0.500U/ 1.00U
AV-300 FINAL
1: 121.500 MHz 1.37
2: 243.000 MHz 1.64
> 3: 406.000 MHz 1.20
6
5.5
5
4.5
4
3.5
3
2.5
2
1.5
1
>Ch1: Start 50.0000 MHz
RF -5.00 dBm
Stop 500.000 MHz

AV-300 & AV-300(-GB) INSTALLATION INSTRUCTIONS
ELT Antenna for General Aviation

Frequency Range: 121.5, 243, 406 MHz

INSTALLATION INSTRUCTIONS

1.) Locate position on top of aircraft to mount antenna. Typically mounted aft of passenger/ baggage area and forward of vertical stabilizer.

2.) Using the template provided, drill three mounting holes and one hole for the connector. Note: Be sure to mount correctly using the front and rear noted on the template.

3.) Mount the antenna by placing the rubber pad provided between the antenna base and aircraft skin and the back-up plate provided inside the aircraft. Insert hardware provided as shown below and tighten all mounting screws securely. Good electrical contact is achieved by means of the countersunk washers biting through the painted surface under the mounting screw heads.

The conditions and tests for TSO approval of this article are minimum performance standards. Those installing this article, on or in a specific type or class of aircraft, must determine that the aircraft installation conditions are within the TSO standards. TSO articles must have separate approval for installation in an aircraft. The article may be installed only according to 14 CFR part 43 or the applicable airworthiness requirements.

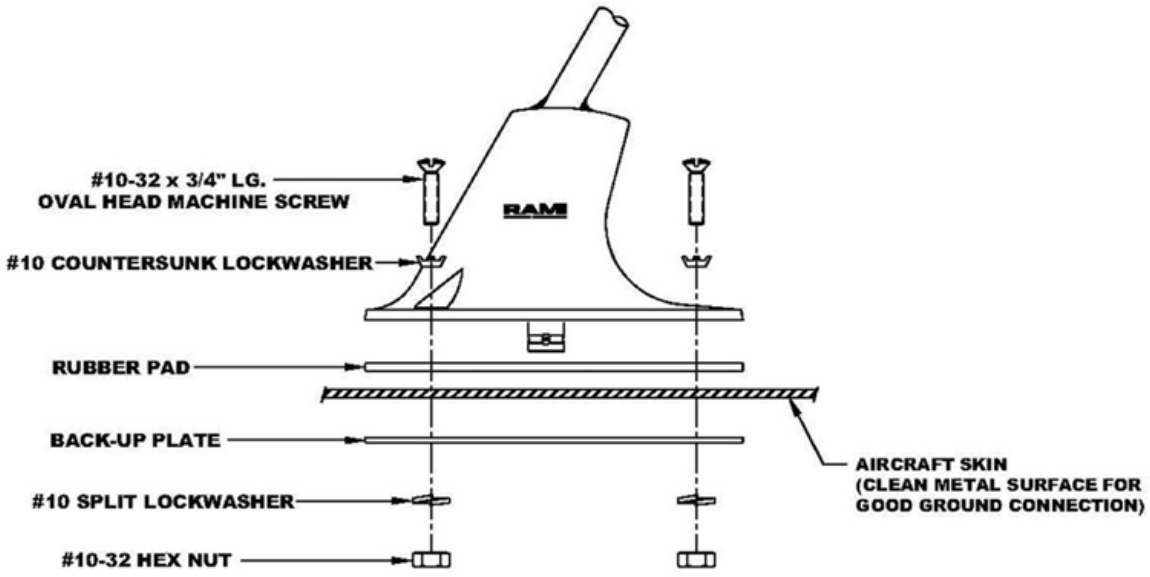

Doc. #27-300-1
Rev.: C, Nov. 2019